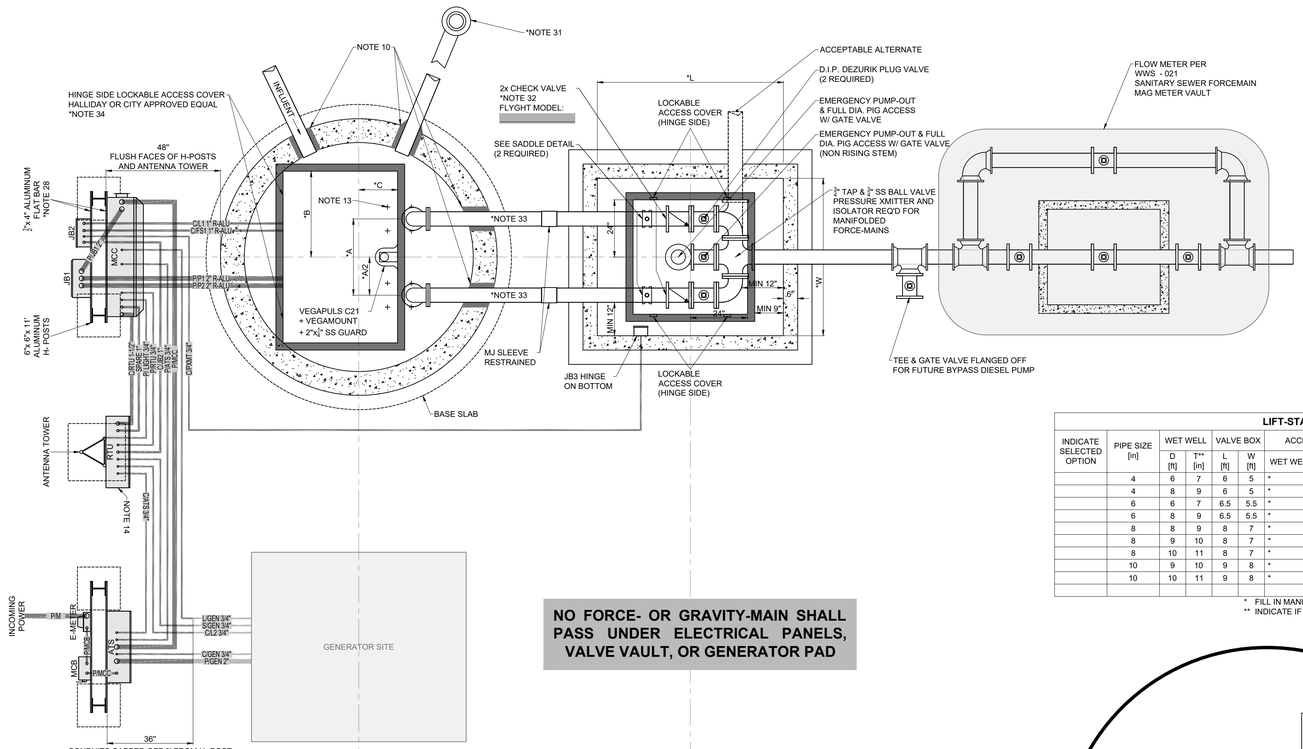

NO FORCE- OR GRAVITY-MAIN SHALL PASS UNDER ELECTRICAL PANELS, VALVE VAULT, OR GENERATOR PAD

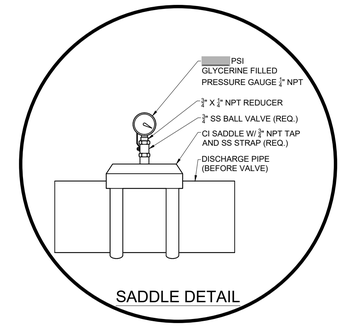

SADDLE DETAIL

GENERAL NOTES:

1. THIS DRAWING PROVIDES DETAILS FOR CONSTRUCTION OF PUMP STATIONS TO BE OWNED AND MAINTAINED BY THE CITY OF LAKELAND, TOGETHER WITH FOLLOWING SHEETS FOR ELECTRICAL/CONTROL SCHEMES. LAYOUT AND ORIENTATION OF FEATURES, SITE DIMENSIONS, AND DRAINAGE SHALL BE PROVIDED ON A SEPARATE PUMP STATION SITE PLAN SCALED NOT SMALLER THAN 1"=5'.
2. ALL ELECTRICAL EQUIPMENT, MATERIAL AND DETAILS OF INSTALLATION SHALL COMPLY WITH THE REQUIREMENTS OF THE NEC, STATE, CITY AND LOCAL CODES, LATEST EDITION. CONTACT CITY OF LAKELAND BUILDING INSPECTION @ (863) 834-6012 FOR APPROVAL OF WORK REQUIRING ELECTRICAL INSPECTOR
3. REFER TO CITY OF LAKELAND "WASTEWATER MATERIALS SPECIFICATION" LIST FOR APPROVED PRODUCT BRANDS AND MODELS.
4. CONCRETE SHALL BE 4000 PSI CONCRETE WITH TYPE II CEMENT. CONCRETE SURFACES SHALL RECEIVE 16 MILS DRY THICKNESS INSIDE AND OUTSIDE OF AN APPROVED COATING.
5. ALL REINFORCED CONCRETE STRUCTURES SHALL BE IN ACCORDANCE WITH ACI CODE 318. STEEL YIELD STRENGTH SHALL BE 60,000 PSI (GRADE 60). WETWELL WALL SHALL CONFORM TO EITHER:
   a. CAST IN PLACE #5 RE-BAR @ 12" O.C.B.W. IN THE CENTER 1/3 OR
   b. PRECAST SECTIONS: ASTM C478
6. WET WELL LOWER SLAB SHALL BE POSITIVELY JOINTED TO WET WELL WALL.
7. PRECAST WET WELL STRUCTURE SHOP DRAWING SHALL BE SUBMITTED FOR REVIEW.
8. USEABLE WET WELL VOLUME SHALL CONFORM TO THE REQUIREMENTS OF THE PUMP MANUFACTURER AND CITY DESIGN STANDARDS.
9. BY-PASS CONNECTION TO BE BRASS QUICK-DISCONNECT TYPE, PART 'D' FEMALE COUPLER AND PART 'W' PLUG.
10. NON-SHRINK GROUT SHALL SEAL AROUND ALL PIPE UNLESS SPECIFIED OTHERWISE BY THE CITY.
11. ALL UNDERGROUND CONDUIT SHALL BE PVC EXCEPT THOSE THAT PENETRATE THE WET WELL.
12. TOP OF SLAB TO BE A MINIMUM OF 4" ABOVE FINISHED GRADE, AND SITE PLAN SHALL DEPICT DRAINAGE TO BE AWAY FROM THE STATION.
13. PUMP BASE ANCHOR BOLT LOCATION AND SIZE SHALL BE PER MANUFACTURER'S SHOP DRAWING.
14. THE DEVELOPER SHALL PROVIDE TELEMETRY IN ACCORDANCE WITH CITY STANDARDS AND SHALL BEAR THE COST OF THE TELEMETRY COMPONENTS AS PROVIDED BY THE CITY, AND SHALL PROVIDE INSTALLATION OF SAME. CITY SHALL PERFORM TELEMETRY START-UP.
15. REFERENCE CITY OF LAKELAND STANDARD ELECTRICAL/TELEMETRY DRAWING FOR ANTENNA, RTU, CONDUIT DESCRIPTION AND GROUNDING DETAILS.
16. ANTENNA DIRECTION WILL BE PROVIDED TO CONTRACTOR BY THE CITY.
17. FACE AND TOP OF ATS, RTU, & MCC TO BE FLUSH.
18. CONDUITS SHALL HAVE A MINIMUM 24" OF COVER, WITH THE EXCEPTION OF POWER SUPPLY CONDUIT, IN WHICH CASE THE COVER SHALL BE MINIMUM 42".
19. SITE LIGHTING SHALL BE FILED39. IT SHALL BE POSITIONED 12' ABOVE SLAB AND BE DIRECTED TOWARD WET WELL. LIGHT IS TO BE MOUNTED ON MCC SIDE LEG OF ANTENNA TOWER.
20. ALL ANCHORS SHALL BE HILTI TYPE 316 SS OR APPROVED EQUAL WITH TYPE 316 SS FASTENERS.
21. PUMP SHAFT SEAL FAILURE WARNING IS INDICATED BY
22. RADIO TELEMETRY SHALL PROVIDE THE AUDIBLE AND VISUAL ALARM AT THE CITY'S WASTEWATER DIVISION OFFICE.
23. PUMP SHALL PASS MINIMUM 3" DEFORMABLE SOLIDS.
24. REMOTE TELEMETRY UNIT SHALL ALTERNATE THE STARTING OF PUMPS.
25. PHASE MONITOR SHALL BE PROVIDED ON 3 PHASE SYSTEMS.
26. ALL NUTS, BOLTS, AND WASHERS LOCATED IN WETWELL AND VALVE VAULT SHALL BE 304 SS.
27. FOR SINGLE PHASE GENERATOR RECEPTACLE, DO NOT USE PIN 2. FOR THREE PHASE GENERATOR RECEPTACLE, CONNECT PIN 2 TO PHASE B.
28. NO FLAT BAR SHALL PROTRUDE BEYOND THE OUTSIDE EDGES OF THE ALUMINUM POST. UNI-STRUT ENDS SHALL BE FILED TO ELIMINATE ROUGH, SHARP EDGES.
29. ALL ABOVE GROUND CONDUIT TO BE RIGID ALUMINUM. ALL BELOW GROUND CONDUIT TO BE PVC, EXCEPT CONDUITS THAT PENETRATE WET WELL SHALL BE RIGID ALUMINUM BELOW AND ABOVE GROUND.
30. SEAL OFF FITTING TYPE EY EXPLOSION PROOF CAST ALUMINUM WITH CHICO EPOXY SEALANT AS PERMANENT SEAL AND PREVENTION OF ALL GASSES FROM JB1 TO MCC & JB2 TO RTU.
31. VANDAL-PROOF HOODED VENT CAP, LOCATED NEAR CLOSEST FENCE SIDE OR CORNER. UNDERGROUND PIPING TO BE PVC. RISER PIPING ABOVE GROUND TO BE DIP, PROTECTO 401 LINED, PAINTED ORANGE PER SPEC. (SEE SITE PLAN FOR TRUE ORIENTATION)
32. CHECK VALVES:
    - SWING CHECK VALVE SHALL BE DEZURIK, MUELLER, OR KENNEDY
    - BALL CHECK VALVE SHALL BE FLYGT (MINIMUM 10 FEET OF STATIC HEAD REQUIRED)
33. DUCTILE IRON PIPE 401 LINED WITH FBE EXTERIOR COATING OR STAINLESS STEEL IF STAINLESS STEEL: 4" - 6" 316 SS - SCHEDULE 40, LARGER THAN 6" USE SCHEDULE 10
34. FOR DUPLEX STATIONS HINGES SHALL BE ON LONG SIDE OF OPENING ON THE PANEL SIDE (FALL PROTECTION)
35. RTU SHALL BE PROVIDED BY CITY OF LAKELAND SPECIFIED VENDOR
36. PHASE ROTATION MUST BE CLOCKWISE OR RIGHT-HAND.

LIFT-STATION MEASUREMENTS

INDICATE SELECTED OPTION	PIPE SIZE [in]	WET WELL		VALVE BOX		ACCESS COVER		DIMENSIONS [in]			TEE [in]	SUMP [in]	BY-PASS 90° BEND [in]	BY-PASS 90° BEND (REDUCING)
		D [ft]	T** [in]	L [ft]	W [ft]	WET WELL	VALVE BOX	A	B	C				
	4	6	7	6	5	*	*	26	*	*			4	
	4	8	9	6	5	*	*	26	*	*			4	
	6	6	7	6.5	5.5	*	*	32	*	*				6x4
	6	8	9	6.5	5.5	*	*	32	*	*				6x4
	8	8	9	8	7	*	*	45	*	*	8x8x6		6	
	8	9	10	8	7	*	*	45	*	*	8x8x6		6	
	8	10	11	8	7	*	*	45	*	*	8x8x6		6	
	10	9	10	9	8	*	*	48	*	*	10x10x6		6	
	10	10	11	9	8	*	*	48	*	*	10x10x6		6	

* FILL IN MANUFACTURER'S REQUIRED VALUE
** INDICATE IF OTHER WALL THICKNESS

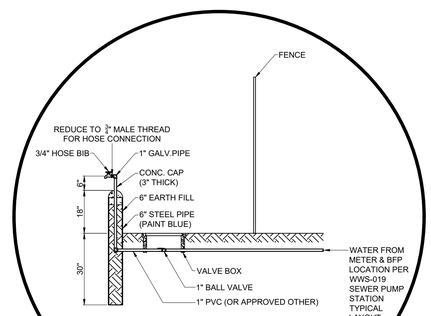

WATER SERVICE DETAIL

HYDRAULIC DATA

PUMP DATA		ELEVATION DATA
MFG.:	MOD:	TOP SLAB [ft]:
IMPELLER:		INFLUENT [ft]:
PUMP DISCHARGE [in]:		ALARM [ft]:
STATIC HEAD [ft]:		LAG PUMP ON [ft]:
GPM (manifolded pumps on):	TDH [ft]:	LEAD PUMP ON [ft]:
GPM (manifolded pumps off):	TDH [ft]:	PUMPS OFF [ft]:
HP:	RPM:	FLOOR [ft]:
PHASE:	VOLTS:	100YR FLOOD ELEV [ft]:

VARIABLE FREQUENCY DRIVE

MFG:	
MODEL:	

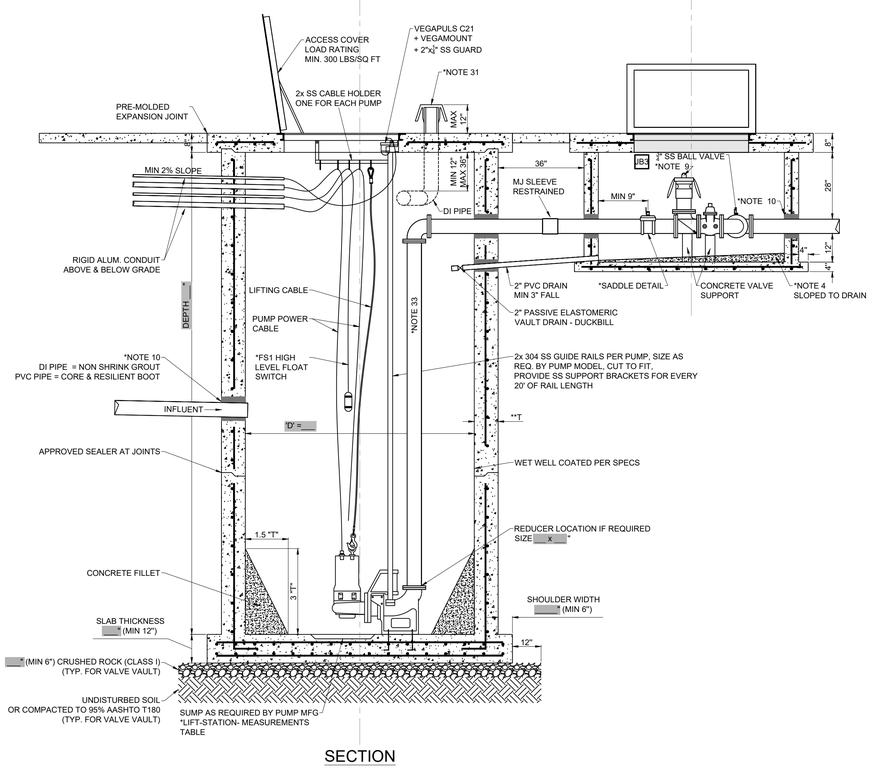

SECTION

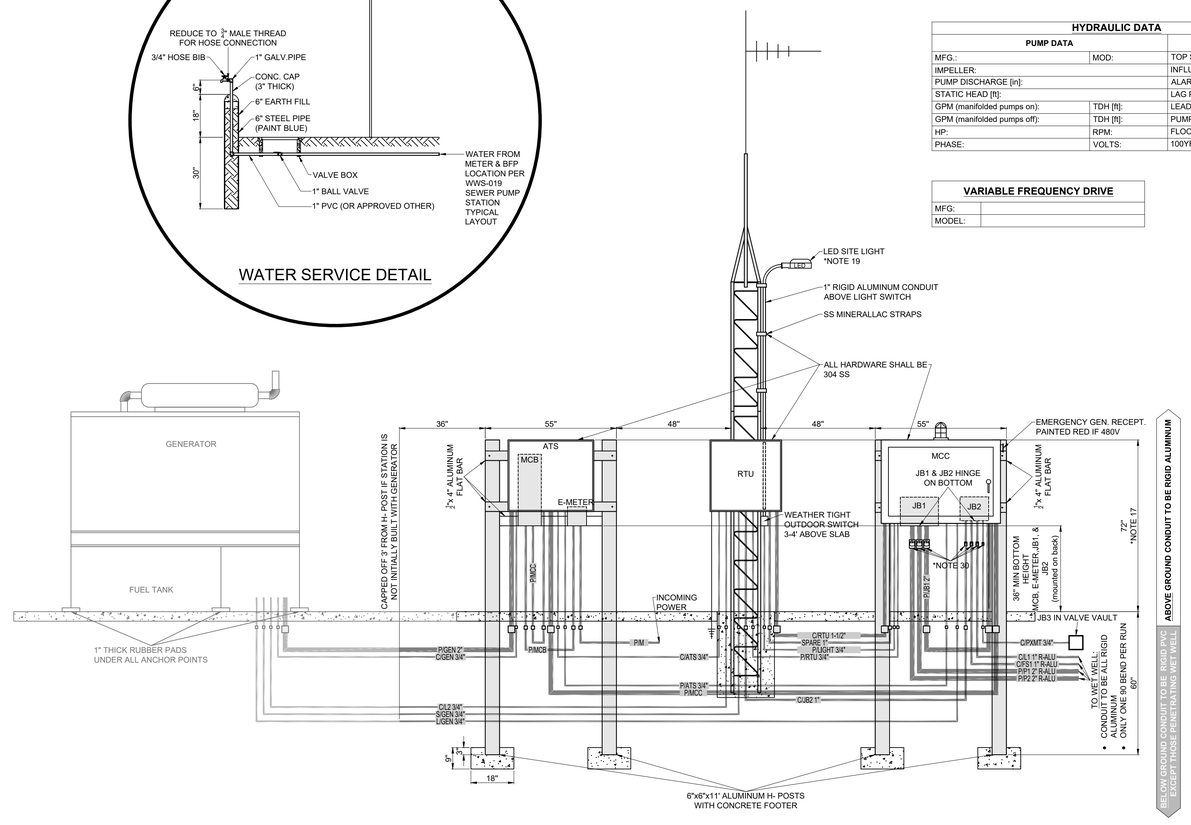

WATER UTILITIES
ENGINEERING DIVISION

501 E. LEMON ST. W-ADMIN/ENG
LAKELAND, FLORIDA 33801-5079
PHONE (863) 834-8316

CITY OF Lakeland WATER UTILITIES

PLOT PAPER SIZE: ARCH FULL BLEED D (24.00 X 36.00 INCHES)

REVISION DESCRIPTION

REVISION DATE

REVISION NO.

DRAWN BY: M.RIESNER

DRAWING DATE: 04/25/2022

SCALE: NO SCALE

SEWER PUMP STATION DETAILS & SPECIFICATIONS

DUPLEX STATION STRUCTURE & PIPING DETAILS

PROJECT NUMBER: ----

DRAWING TYPE: DETAILS & SPEC.

SHEET: D1

ENGINEER: ----

FLORIDA P.E. LIC NO. ----

SIG:

DATE:

C:\USERS\MRIESN\ONEDRIVE - CITY OF LAKELAND\TUTORIALS\STANDARD DETAIL DRAWINGS\PUMP STATION SHEET UPDATE\NEW PUMP STATION DETAILS - VISIT - CORE.DWG

PLOT DATE: 15-Nov-22

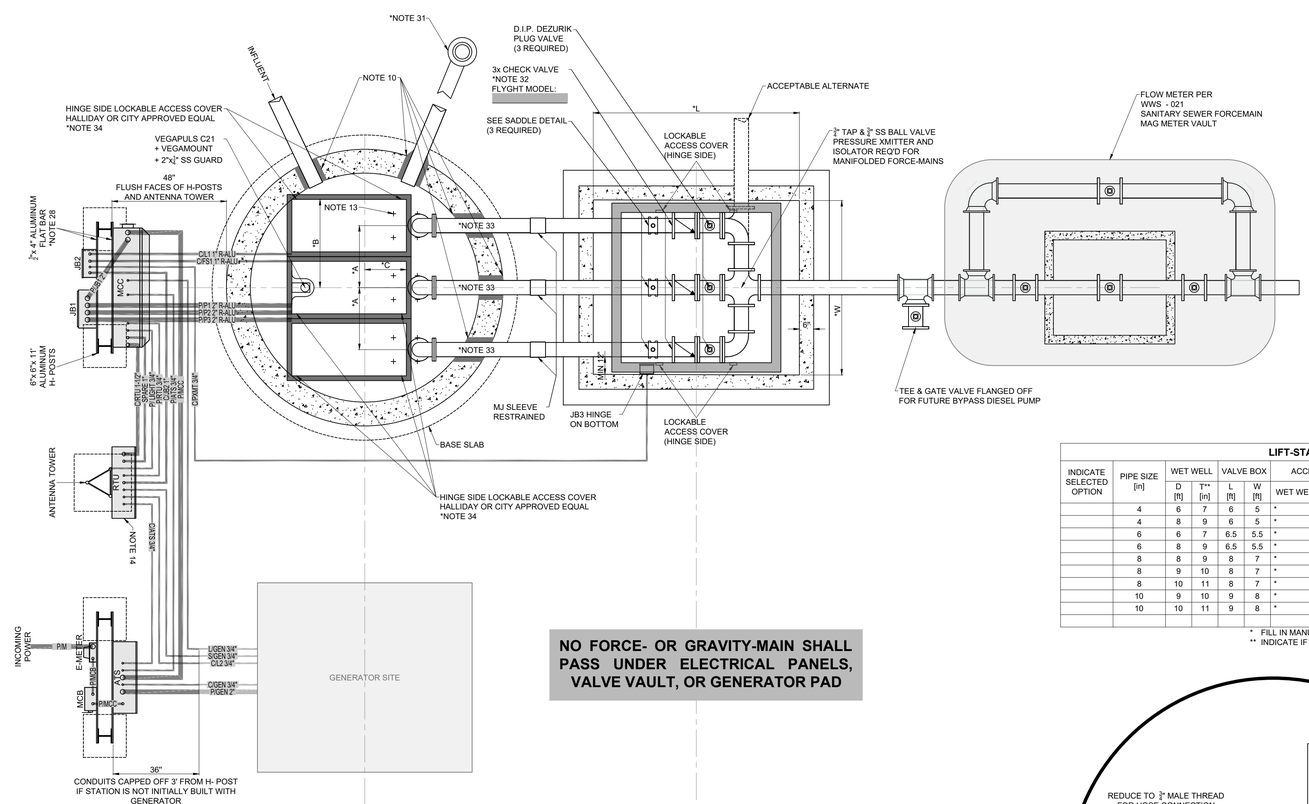

NO FORCE- OR GRAVITY-MAIN SHALL PASS UNDER ELECTRICAL PANELS, VALVE VAULT, OR GENERATOR PAD

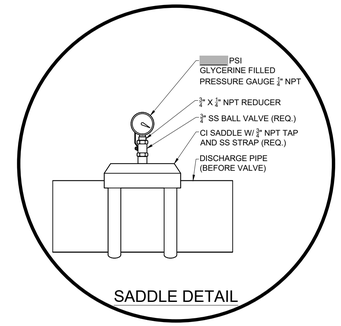

SADDLE DETAIL

GENERAL NOTES:

1. THIS DRAWING PROVIDES DETAILS FOR CONSTRUCTION OF PUMP STATIONS TO BE OWNED AND MAINTAINED BY THE CITY OF LAKELAND. TOGETHER WITH FOLLOWING SHEETS FOR ELECTRICAL/CONTROL SCHEMES. LAYOUT AND ORIENTATION OF FEATURES, SITE DIMENSIONS, AND DRAINAGE SHALL BE PROVIDED ON A SEPARATE PUMP STATION SITE PLAN SCALED NOT SMALLER THAN 1"=5'.
2. ALL ELECTRICAL EQUIPMENT, MATERIAL AND DETAILS OF INSTALLATION SHALL COMPLY WITH THE REQUIREMENTS OF THE NEC, STATE, CITY AND LOCAL CODES. LATEST EDITION. CONTACT CITY OF LAKELAND BUILDING INSPECTION @ (863) 834-6012 FOR APPROVAL OF WORK REQUIRING ELECTRICAL INSPECTOR.
3. REFER TO CITY OF LAKELAND "WASTEWATER MATERIALS SPECIFICATION" LIST FOR APPROVED PRODUCT BRANDS AND MODELS.
4. CONCRETE SHALL BE 4000 PSI CONCRETE WITH TYPE II CEMENT. CONCRETE SURFACES SHALL RECEIVE 16 MILS DRY THICKNESS INSIDE AND OUTSIDE OF AN APPROVED COATING.
5. ALL REINFORCED CONCRETE STRUCTURES SHALL BE IN ACCORDANCE WITH ACI CODE 318. STEEL YIELD STRENGTH SHALL BE 60,000 PSI (GRADE 60). WETWELL WALL SHALL CONFORM TO EITHER:
   a. CAST IN PLACE #5 RE-BAR @ 12" O.C.B.W. IN THE CENTER 1/3 OR
   b. PRECAST SECTIONS: ASTM C478
6. WET WELL LOWER SLAB SHALL BE POSITIVELY JOINTED TO WET WELL WALL.
7. PRECAST WET WELL STRUCTURE SHOP DRAWING SHALL BE SUBMITTED FOR REVIEW.
8. USEABLE WET WELL VOLUME SHALL CONFORM TO THE REQUIREMENTS OF THE PUMP MANUFACTURER AND CITY DESIGN STANDARDS.
9. BY-PASS CONNECTION TO BE BRASS QUICK-DISCONNECT TYPE, PART 'D' FEMALE COUPLER AND PART 'W' PLUG.
10. NON-SHRINK GROUT OR RESILIENT BOOT CONNECTION (SEE REF DETAIL: WWS-005B) SHALL SEAL AROUND ALL PIPE UNLESS SPECIFIED OTHERWISE BY THE CITY.
11. ALL UNDERGROUND CONDUIT SHALL BE PVC EXCEPT THOSE THAT PENETRATE THE WET WELL.
12. TOP OF SLAB TO BE A MINIMUM OF 4" ABOVE FINISHED GRADE, AND SITE PLAN SHALL DEPICT DRAINAGE TO BE AWAY FROM THE STATION.
13. PUMP BASE ANCHOR BOLT LOCATION AND SIZE SHALL BE PER MANUFACTURER'S SHOP DRAWING.
14. THE DEVELOPER SHALL PROVIDE TELEMETRY IN ACCORDANCE WITH CITY STANDARDS AND SHALL BEAR THE COST OF THE TELEMETRY COMPONENTS AS PROVIDED BY THE CITY, AND SHALL PROVIDE INSTALLATION OF SAME. CITY SHALL PERFORM TELEMETRY START-UP.
15. REFERENCE CITY OF LAKELAND STANDARD ELECTRICAL/TELEMETRY DRAWING FOR ANTENNA, RTU, CONDUIT DESCRIPTION AND GROUNDING DETAILS.
16. ANTENNA DIRECTION WILL BE PROVIDED TO CONTRACTOR BY THE CITY.
17. FACE AND TOP OF ATS, RTU, & MCC TO BE FLUSH.
18. CONDUITS SHALL HAVE A MINIMUM 24" OF COVER, WITH THE EXCEPTION OF POWER SUPPLY CONDUIT, IN WHICH CASE THE COVER SHALL BE MINIMUM 42".
19. SITE LIGHTING SHALL BE FFLED39. IT SHALL BE POSITIONED 12' ABOVE SLAB AND BE DIRECTED TOWARD WET WELL. LIGHT IS TO BE MOUNTED ON MCC SIDE LEG OF ANTENNA TOWER.
20. ALL ANCHORS SHALL BE HILTI TYPE 316 SS OR APPROVED EQUAL WITH TYPE 316 SS FASTENERS.
21. PUMP SHAFT SEAL FAILURE WARNING IS INDICATED BY
22. RADIO TELEMETRY SHALL PROVIDE THE AUDIBLE AND VISUAL ALARM AT THE CITY'S WASTEWATER DIVISION OFFICE.
23. PUMP SHALL PASS MINIMUM 3" DEFORMABLE SOLIDS.
24. REMOTE TELEMETRY UNIT SHALL ALTERNATE THE STARTING OF PUMPS.
25. PHASE MONITOR SHALL BE PROVIDED ON 3 PHASE SYSTEMS.
26. ALL NUTS, BOLTS, AND WASHERS LOCATED IN WETWELL AND VALVE VAULT SHALL BE 304 SS.
27. FOR SINGLE PHASE GENERATOR RECEPTACLE, DO NOT USE PIN 2. FOR THREE PHASE GENERATOR RECEPTACLE, CONNECT PIN 2 TO PHASE B.
28. NO FLAT BAR SHALL PROTRUDE BEYOND THE OUTSIDE EDGES OF THE ALUMINUM POST. UNI-STRUT ENDS SHALL BE FILED TO ELIMINATE ROUGH, SHARP EDGES.
29. ALL ABOVE GROUND CONDUIT TO BE RIGID ALUMINUM. ALL BELOW GROUND CONDUIT TO BE PVC, EXCEPT CONDUITS THAT PENETRATE WET WELL SHALL BE RIGID ALUMINUM BELOW AND ABOVE GROUND.
30. SEAL OFF FITTING TYPE EY EXPLOSION PROOF CAST ALUMINUM WITH CHICO EPOXY SEALANT AS PERMANENT SEAL AND PREVENTION OF ALL GASSES FROM JB1 TO MCC & JB2 TO RTU.
31. VANDAL-PROOF HOODED VENT CAP, LOCATED NEAR CLOSEST FENCE SIDE OR CORNER. UNDERGROUND PIPING TO BE PVC. RISER PIPING ABOVE GROUND TO BE DIP, PROTECTO 401 LINED, PAINTED ORANGE PER SPEC. (SEE SITE PLAN FOR TRUE ORIENTATION).
32. CHECK VALVES:
    - SWING CHECK VALVE SHALL BE DEZURIK, MUELLER, OR KENNEDY
    - BALL CHECK VALVE SHALL BE FLYGT (MINIMUM 10 FEET OF STATIC HEAD REQUIRED)
33. DUCTILE IRON PIPE 401 LINED WITH FBE EXTERIOR COATING OR STAINLESS STEEL IF STAINLESS STEEL: 4" - 6" 316 SS - SCHEDULE 40, LARGER THAN 6" USE SCHEDULE 10
34. FOR TRIPLEX STATIONS HINGES SHALL BE ON LONG SIDE OF OPENING ON OUTSIDES.
35. RTU SHALL BE PROVIDED BY CITY OF LAKELAND SPECIFIED VENDOR
36. PHASE ROTATION MUST BE CLOCKWISE OR RIGHT-HAND.

LIFT-STATION MEASUREMENTS

INDICATE SELECTED OPTION	PIPE SIZE [in]	WET WELL		VALVE BOX		ACCESS COVER		DIMENSIONS [in]			TEE [in]	SUMP [in]	BY-PASS 90° BEND [in]	BY-PASS 90° BEND (REDUCING)
		D [ft]	T** [in]	L [ft]	W [ft]	WET WELL	VALVE BOX	A	B	C				
	4	6	7	6	5	*	*	26	*	*			4	
	4	8	9	6	5	*	*	26	*	*			4	
	6	6	7	6.5	5.5	*	*	32	*	*				6x4
	6	8	9	6.5	5.5	*	*	32	*	*				6x4
	8	8	9	8	7	*	*	45	*	*	8x8x6		6	
	8	9	10	8	7	*	*	45	*	*	8x8x6		6	
	8	10	11	8	7	*	*	45	*	*	8x8x6		6	
	10	9	10	9	8	*	*	48	*	*	10x10x6		6	
	10	10	11	9	8	*	*	48	*	*	10x10x6		6	

* FILL IN MANUFACTURER'S REQUIRED VALUE
** INDICATE IF OTHER WALL THICKNESS

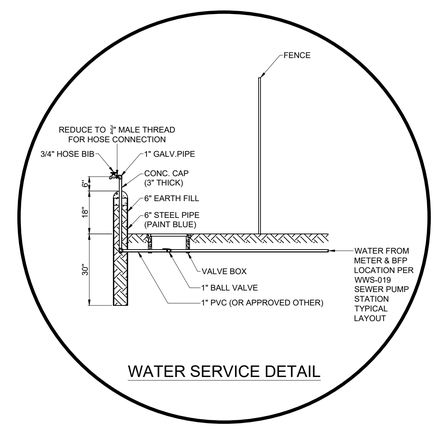

WATER SERVICE DETAIL

HYDRAULIC DATA

PUMP DATA		ELEVATION DATA
MFG.:	MOD:	TOP SLAB [ft]:
IMPELLER:		INFLUENT [ft]:
PUMP DISCHARGE [in]:		ALARM [ft]:
STATIC HEAD [ft]:		LAG PUMP 2 ON [ft]:
GPM (manifolded pumps on):	TDH [ft]:	LAG PUMP 1 ON [ft]:
GPM (manifolded pumps off):	TDH [ft]:	LEAD PUMP ON [ft]:
HP:	RPM:	PUMPS OFF [ft]:
PHASE:	VOLTS:	FLOOR [ft]:
		100YR FLOOD ELEV [ft]:

VARIABLE FREQUENCY DRIVE

MFG:	
MODEL:	

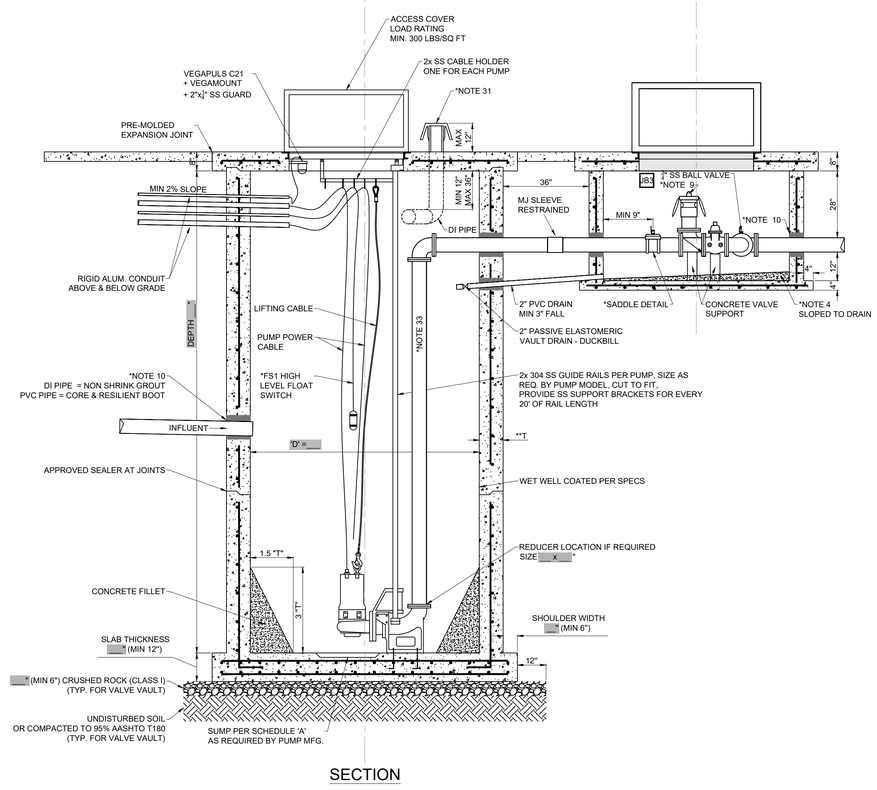

SECTION

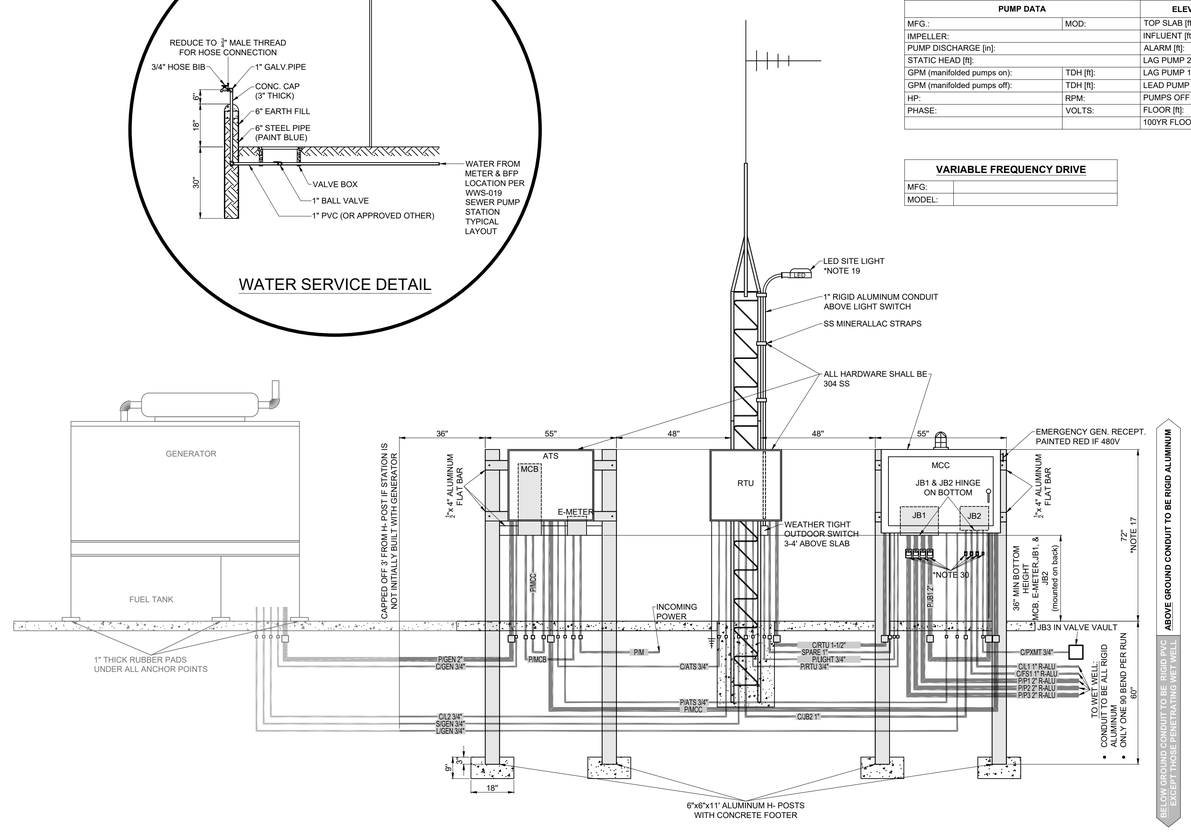

WATER UTILITIES
ENGINEERING DIVISION

501 E. LEMON ST. W-ADMIN/ENG
LAKELAND, FLORIDA 33801-5079
PHONE (863) 834-8316

CITY OF Lakeland WATER UTILITIES

REVISION DESCRIPTION

REVISION DATE

REVISION NO.

DRAWN BY: M.RIESNER

DRAWING DATE: 04/25/2022

SCALE: NO SCALE

SEWER PUMP STATION DETAILS & SPECIFICATIONS

TRIPLEX STATION STRUCTURE & PIPING DETAILS

PROJECT NUMBER: ----

DRAWING TYPE: DETAILS & SPEC.

SHEET: D2

ENGINEER: ----

FLORIDA P.E. LIC NO. ----

SIG:

DATE:

PLOT PAPER SIZE: ARCH FULL BLEED D (24.00 X 36.00 INCHES)

C:\USERS\MRIESN\ONEDRIVE - CITY OF LAKELAND\TODDS\STANDARD DETAIL DRAWINGS\PUMPSTATION SHEET UPDATE\NEW PUMP STATION DETAILS\PUMP-STATION DETAILS - VOIST - CORE.DWG

PLOT DATE: 15-Nov-22

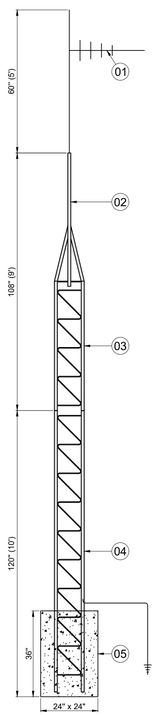

ANTENNA TOWER

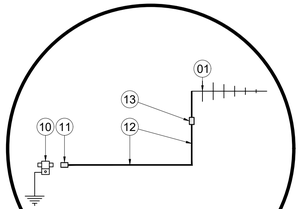

ANTENNA CABLING DETAIL

BILL OF MATERIALS - RADIO TELEMETRY		
MARK	DESCRIPTION	QUANTITY
01	SINCLAIR SRL-307 ANTENNA	1
02	1 1/2" x 10' ALUMINUM CONDUIT	1
03	9' TOWER TOP SECTION, ROHN CLONE 25VG	1
04	10' TOWER BASE SECTION, ROHN CLONE 25V	1
05	READY MIX CONCRETE FILL	AS REQ'D
10	LIGHTNING PROTECTOR, POLYPHASER IS-50UX-C1	1
11	TYPE U MALE CONN, L44ASP (DBK012B1U-BM)	1
12	HELIAX CABLE, ANDREW LDF4-50A (DB-012F5P)	AS REQ'D
13	TYPE N FEMALE CONN, L4PNF-RC	1

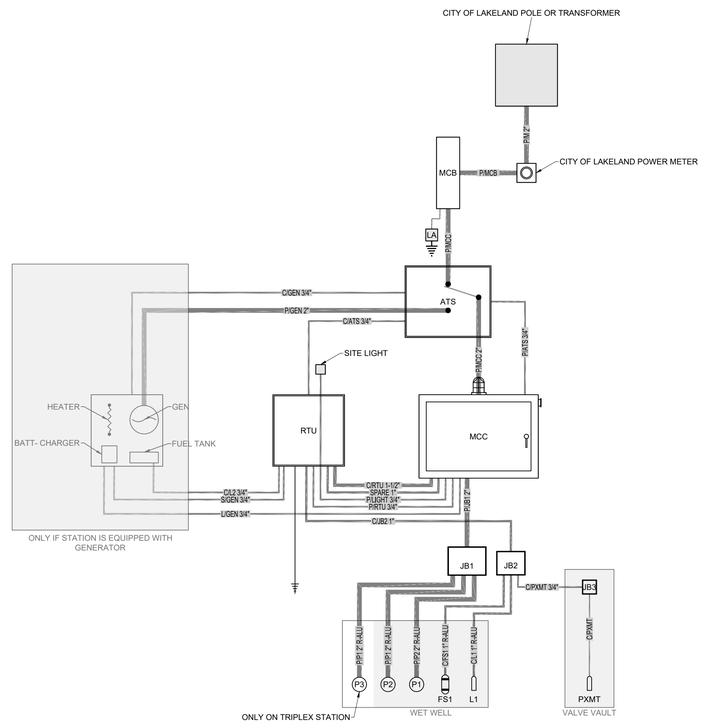

CONDUIT AND CABLE SCHEDULE	
MARK	DESCRIPTION
C/ATS	3/4" CONDUIT FROM RTU TO ATS TO SHOW POSITION OF SWITCH IN EMERGENCY AND NORMAL POSITION. ---- (4) #14 THHN/THWN
C/FS1	1" CONDUIT FROM JB2 TO FLOAT SWITCH (FS1) IN WETWELL FOR HIGH WELL LEVEL INDICATION. CONDUCTOR PROVIDED WITH FLOAT.
C/GEN	3/4" CONDUIT FROM EMERGENCY GENERATOR TO ATS FOR GENERATOR CONTROL. ---- (4) #14 THHN/THWN (IF STATION IS NOT INITIALLY EQUIPPED WITH GENERATOR, CONDUIT IS TO BE INSTALLED AND CAPPED ONLY TO 3' FROM ATS H-POST AND NO CONDUITS ARE PULLED IN.)
C/JB2	1" CONDUIT FROM RTU TO JB2
C/L1	3/4" CONDUIT FROM WET WELL TO JB2 FOR L1. ---- (1) #18-2 CONDUCTOR PLUS SHIELDED BELDEN #8760 VEGAPULS C23 RADAR
C/L2	3/4" CONDUIT FROM FUEL TANK LEVEL INDICATOR TO RTU FOR LOW FUEL LEVEL INDICATION. ---- 2/C #18 SHIELDED CABLE, BELDEN #8760 (IF STATION IS NOT INITIALLY EQUIPPED WITH GENERATOR, CONDUIT IS TO BE INSTALLED AND CAPPED ONLY TO 3' FROM ATS H-POST AND NO CONDUITS ARE PULLED IN.)
C/PXMT	3/4" CONDUIT FROM JUNCTION BOX JB2 TO JB3 IN VALVE VAULT FOR PRESSURE TRANSMITTER. IF STATION IS NOT MANIFOLDED, CONDUIT IS TO BE LEFT EMPTY AND PRESSURE TRANSMITTER IS NOT INSTALLED.
C/RTU	1-1/2" CONDUIT FROM MCC TO RTU. NOTE 2. ---- (36) #14 MTW 41 STRAND
L/GEN	3/4" CONDUIT FROM 2-POLE CIRCUIT BREAKER IN MCC TO EMERGENCY GENERATOR CONTROL PANEL FOR HEATER, BATTERY CHARGER, AND PUMP. ---- (3) #10 THHN/THWN AND (1) #10 GROUND (IF STATION IS NOT INITIALLY EQUIPPED WITH GENERATOR, CONDUIT IS TO BE INSTALLED AND CAPPED ONLY TO 3' FROM ATS H-POST AND NO CONDUITS ARE PULLED IN.)
P/ATS	3/4" CONDUIT FROM MCC TO ATS TO PROVIDE CONTROL POWER FOR ATS. ---- (2) #12 THHN/THWN
P/GEN	__" CONDUIT FROM ATS TO GENERATOR. ---- (__) #__/__ THHN/THWN AND (__) #____ THW GROUND. (IF STATION IS NOT INITIALLY EQUIPPED WITH GENERATOR, CONDUIT IS TO BE INSTALLED AND CAPPED ONLY TO 3' FROM ATS H-POST AND NO CONDUITS ARE PULLED IN.)
P/JB1	__" CONDUIT FROM MCC TO JB1 ---- (__) #__/__ THHN/THWN, (__) #__ THW GROUND FOR MOTOR LEADS AND (12) #10 THHN/THWN FOR HEAT SENSOR
P/LIGHT	3/4" CONDUIT FROM MCC TO ANTENNA TOWER FOR LED SITE LIGHT
P/M	__" CONDUIT FOR ___/___ VAC __ PHASE __ WIRE SERVICE FROM C.O.L. TRANSFORMER OR POLE TO C.O.L. METER (M) (CONDUCTORS BY CITY ELECTRIC UTILITY)
P/MCB	__ " CONDUIT FOR ___/___ VAC __ PHASE __ WIRE SERVICE FROM C.O.L. METER (M) TO MCB
P/MCC	__" CONDUIT FOR ___/___ VAC __ PHASE __ WIRE SERVICE FROM MCB TO ATS AND FROM ATS TO MCC ---- (__) #__/__ THHN/THWN AND (1) #___ THW GROUND.
P/P1/P2	(2) 2" RIGID ALUMINUM FROM JB1 TO WET-WELL. ---- (__) #__ THHN/THWN, (1) #__ THW GROUND FOR MOTOR LEADS AND (__) #__ THHN/THWN FOR HEAT SENSOR, SEAL FAIL SIGNAL
P/RTU	3/4" CONDUIT FROM MCC TO RTU. ---- (3) #12 MTW 41 STRAND & GROUND IN (BLK., WHT., & GRN.).
S/GEN	3/4" CONDUIT FROM EMERGENCY GENERATOR (GEN) CONTROL PANEL TO RTU FOR SIGNALS TO INDICATE GENERATOR RUNNING, GENERATOR OFF, ETC. ---- (8) #14 THHN/THWN (IF STATION IS NOT INITIALLY EQUIPPED WITH GENERATOR, CONDUIT IS TO BE INSTALLED AND CAPPED ONLY TO 3' FROM ATS H-POST AND NO CONDUITS ARE PULLED IN.)
SPARE	1" EMPTY CONDUIT FROM MCC TO RTU

ALL CONDUCTORS SHALL BE STRANDED

BILL OF MATERIALS - ELECTRICAL		
MARK	QUAN	DESCRIPTION
ATS	1	AUTOMATIC TRANSFER SWITCH PER SPECIFICATIONS.
FS1	1	HIGH LEVEL FLOAT SWITCH
GEN	1	GENERATOR PER SPECIFICATIONS.
JB1	1	NEMA 4X 304 STAINLESS STEEL JUNCTION BOX (JB1) "CHNFSS" WITH CLAMP COVER, MIN. SIZE AS REQUIRED TO ACCOMMODATE CONDUITS, MANUFACTURED BY HOFFMAN ENGINEERING CORP., OR APPROVED EQUAL. BOX SHALL BE FURNISHED WITH INTERNALLY WIRED TERMINAL STRIPS FOR PUMP CABLES; PHOENIX 3212072 OR EQUAL. JUNCTION BOX TO BE MOUNTED BEHIND MCC ON 6" X 6" ALUMINUM H- POSTS.
JB2	1	LOW VOLTAGE HIGH FLOAT, RADAR, PRESSURE TRANSMITTER 12x10x6 SS
JB3	1	VALVE BOX LOW VOLTAGE 6x6x4 SS
LA	1	LIGHTNING ARRESTOR LA, 3Ø, SQUARE 'D', CAT. NO. SP3650.
L1	1	VEGAPULS C23 RADAR
MCB	1	MAIN CIRCUIT BREAKER, ____ AMP, _ POLE, ____ VOLT IN NEMA 4X STAINLESS STEEL ENCLOSURE. SQUARE 'D' COMPANY 'H' OR 'J' FRAME CIRCUIT BREAKER AND ENCLOSURE.
MCC	1	POWER PANEL MCC FURNISHED BY PUMP MANUFACTURER, INSTALLED AND CONNECTED BY ELECTRICAL CONTRACTOR.
PXMT	1	PRESSURE TRANSMITTER ON FORCE-MAIN IN VALVE VAULT ONLY PROVIDED FOR SITES WITH FORCE-MAIN MANIFOLDS
RTU	1	RTU CABINET, INSTALLED BY ELECTRICAL CONTRACTOR.
L	2	SEAL OFF FITTING TYPE EY EXPLOSION-PROOF CAST ALUMINUM WITH CHICO SEALANT FOR PREVENTION OF CORROSIVE GASSES FROM JUNCTION BOXES JB1 AND JB2.

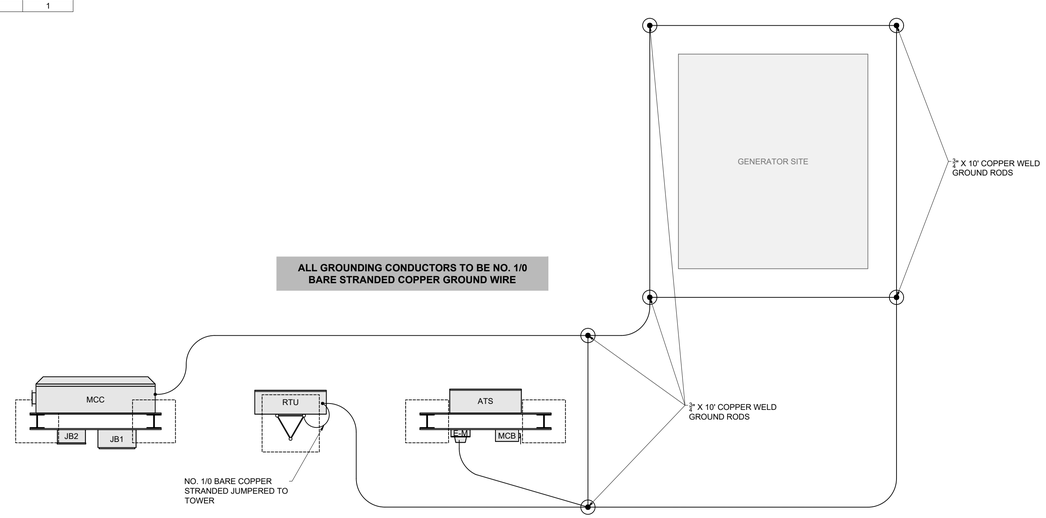

GROUNDING PLAN

WATER UTILITIES
ENGINEERING DIVISION
501 E. LEMON ST. W-ADMIN/ENG
LAKELAND, FLORIDA 33801-5079
PHONE (863) 834-8316
CITY OF Lakeland WATER UTILITIES

REVISION DESCRIPTION

REVISON DATE

REVISON NO.

DRAWN BY: M.RIESNER

DRAWING DATE: 04/25/2022

SCALE: NO SCALE

SEWER PUMP STATION DETAILS & SPECIFICATIONS

TELEMETRY & ELECTRICAL DETAILS (1)

PROJECT NUMBER: ----

DRAWING TYPE: DETAILS & SPEC.

SHEET: D3

ENGINEER: ---

FLORIDA P.E. LIC NO. ----

SIG: _____

DATE: _____

PLOT DATE: 10-Jun-22

C:\USERS\MRIESN\ONEDRIVE - CITY OF LAKELAND\AUTOCAD\STANDARD DETAIL DRAWINGS\PUMPS\STATION SHEET UPDATES\D-PUMP STATION DETAILS\PUMP-STATION DETAILS - XREF CORE.DWG

PLOT PAPER SIZE: ARCH FULL BLEED D (24.00 X 36.00 INCHES)

WIRING SCHEDULE - MCC DUPLEX AND TRIPLEX STATION		
	TERMINAL NO.	DESCRIPTION
CONTROL TERMINAL BLOCK #1	1	PUMP #1 START RELAY
	2	PUMP #1 START RELAY
	3	PUMP #2 START RELAY
	4	PUMP #2 START RELAY
	5	PUMP #3 START RELAY
	6	PUMP #3 START RELAY
	7	STATION FAULT RELAY
	8	STATION FAULT RELAY
	9	STARTER #1 AUX. CONTACT
	10	STARTER #1 AUX. CONTACT
	11	STARTER #2 AUX. CONTACT
	12	STARTER #2 AUX. CONTACT
	13	STARTER #3 AUX. CONTACT
	14	STARTER #3 AUX. CONTACT
	15	SPARE
	16	SPARE
	17	PHASE MONITOR ALARM
	18	PHASE MONITOR ALARM
	19	PROOF OF RUN #1
	20	PROOF OF RUN #1
	21	PROOF OF RUN #2
	22	PROOF OF RUN #2
	23	PROOF OF RUN #3
	24	PROOF OF RUN #3
CONTROL TERMINAL BLOCK #2	25	INTRUSION ALARM
	26	INTRUSION ALARM
	27	AUTO MEG #1 ALARM
	28	AUTO MEG #1 ALARM
	29	AUTO MEG #2 ALARM
	30	AUTO MEG #2 ALARM
	31	AUTO MEG #3 ALARM
	32	AUTO MEG #3 ALARM
	33	SEAL FAIL #1 ALARM
	34	SEAL FAIL #1 ALARM
	35	SEAL FAIL #2 ALARM
	36	SEAL FAIL #2 ALARM
	37	SEAL FAIL #3 ALARM
	38	SEAL FAIL #3 ALARM
	39	SPARE
	40	SPARE
	41	SPARE
	42	SPARE
	43	SPARE
	44	SPARE
	45	SPARE
	46	SPARE
	47	SPARE
	48	SPARE
CONTROL TERMINAL BLOCK #3	49	SPARE
	50	SPARE
	51	SPARE
	52	SPARE
	53	SPARE
	54	SPARE
	55	SPARE
	56	SPARE
	57	SPARE
	58	SPARE
	59	SPARE
	60	SPARE
	61	MOISTURE SENSOR PUMP #1
	62	MOISTURE SENSOR PUMP #1
	63	MOISTURE SENSOR PUMP #2
	64	MOISTURE SENSOR PUMP #2
	65	MOISTURE SENSOR PUMP #3
	66	MOISTURE SENSOR PUMP #3
	67	THERMAL SENSOR PUMP #1
	68	THERMAL SENSOR PUMP #1
	69	THERMAL SENSOR PUMP #2
	70	THERMAL SENSOR PUMP #2
	71	THERMAL SENSOR PUMP #3
	72	THERMAL SENSOR PUMP #3

JB1
(JUNCTION BOX 1)
DUPLEX STATION

JUNCTION BOX:	A16H1606SSLP 16"H x 16"W x 6"D HINGED ON BOTTOM
POWER BLOCK:	PHOENIX 3212072
CONTROL TERMINAL:	SQUARE 'D' 9080GR6 BOX LUG 9080GR6B END BARRIER GH10 END CLAMP GH1## MOUNTING CHANNEL

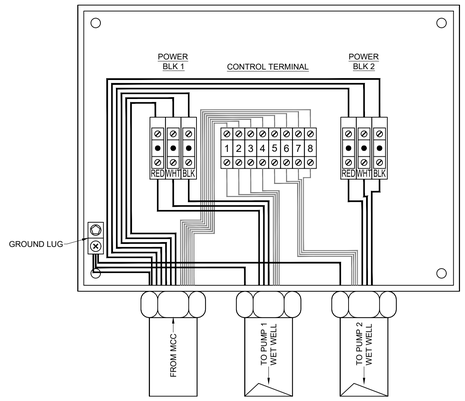

JB1
(JUNCTION BOX 1)
TRIPLEX STATION

JUNCTION BOX:	A20H1606SSLP 20"H x 16"W x 6"D HINGED ON BOTTOM
POWER BLOCK:	PHOENIX 3212072
CONTROL TERMINAL:	SQUARE 'D' 9080GR6 BOX LUG 9080GR6B END BARRIER GH10 END CLAMP GH1## MOUNTING CHANNEL

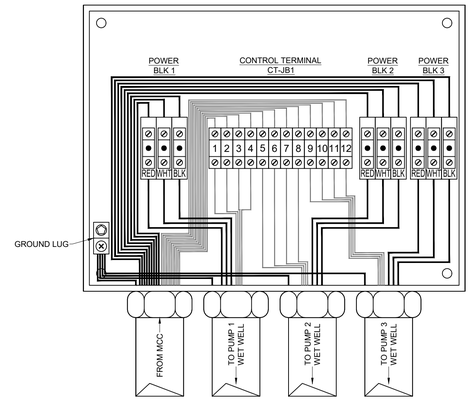

JB2
(JUNCTION BOX 2)

JUNCTION BOX:	HOFFMAN A12106CHNFSS 12"H x 10"W x 6"D
POWER BLOCK:	-
CONTROL TERMINAL:	-

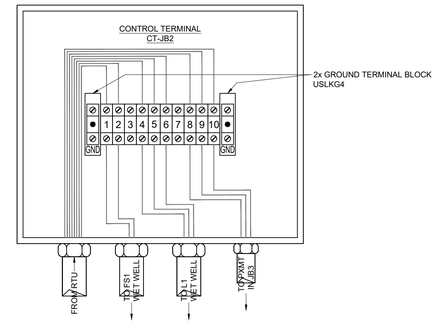

JB3
(JUNCTION BOX 3)

JUNCTION BOX:	HOFFMAN A606CHNFSS 6"H x 6"W x 4"D
POWER BLOCK:	-
CONTROL TERMINAL:	-

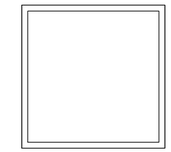

WIRING SCHEDULE - JB1 DUPLEX STATION (ADD FOR TRIPLEX STATION)

JB1	WIRE TAG	WIRE COLOR	DESCRIPTION	MCC
POWER BLOCK #1	1	RED	3Ø PUMP #1 MOTOR CONNECTORS GA AS REQ'D	MOTOR STARTER #1 TERMINALS LOAD SIDE
		WHITE		
		BLACK		
CT #1		RED/ BLUE STRIPE	14 GA THERMAL SENSOR	CTB3 #67
CT #2		RED/ BLUE STRIPE	14 GA THERMAL SENSOR	CTB3 #68
CT #3		RED/ YELLOW STRIPE	14 GA MOISTURE SENSOR	CTB3 #61
CT #4		RED/ YELLOW STRIPE	14 GA MOISTURE SENSOR	CTB3 #62
GND LUG		YELLOW/GREEN	CONTROL & POWER GROUND	GROUND LUG
POWER BLOCK #2	2	RED	3Ø PUMP #2 MOTOR CONNECTORS GA AS REQ'D	MOTOR STARTER #2 TERMINALS LOAD SIDE
		WHITE		
		BLACK		
CT #5		ORANGE/ BLUE STRIPE	14 GA THERMAL SENSOR	CTB3 #69
CT #6		ORANGE/ BLUE STRIPE	14 GA THERMAL SENSOR	CTB3 #70
CT #7		ORANGE/ YELLOW STRIPE	14 GA MOISTURE SENSOR	CTB3 #63
CT #8		ORANGE/ YELLOW STRIPE	14 GA MOISTURE SENSOR	CTB3 #64
GND LUG		YELLOW/GREEN	CONTROL & POWER GROUND	GROUND LUG
POWER BLOCK #3	3	RED	3Ø PUMP #3 MOTOR CONNECTORS GA AS REQ'D	MOTOR STARTER #3 TERMINALS LOAD SIDE
		WHITE		
		BLACK		
CT #9		BLUE	14 GA THERMAL SENSOR	CTB3 #71
CT #10		ORANGE	14 GA THERMAL SENSOR	CTB3 #72
CT #11		RED	14 GA MOISTURE SENSOR	CTB3 #65
CT #12		GREEN	14 GA MOISTURE SENSOR	CTB3 #66
GND LUG		YELLOW/GREEN	CONTROL & POWER GROUND	GROUND LUG

WIRING SCHEDULE - JB2

JB2	COLOR	DESCRIPTION	MCC
CT #1		14 GA FS1 (HIGH LEVEL FLOAT)	CTB1 #15
CT #2		14 GA FS1 (HIGH LEVEL FLOAT)	CTB1 #16
CT #3			
CT #4		14 GA L1 + (LEVEL SENSOR)	CTB3 #49
CT #5		14 GA L1 - (LEVEL SENSOR)	CTB3 #50
CT #6		14 GA L1 SHIELD (LEVEL SENSOR)	CTB3 #51
CT #7			
CT #8			
CT #9			
CT #10			

WATER UTILITIES
ENGINEERING DIVISION
501 E. LEMON ST. W-ADMIN/ENG
LAKELAND, FLORIDA 33801-5079
PHONE (863) 834-8316
CITY OF Lakeland WATER UTILITIES

REVISION DESCRIPTION

REVISION DATE

REVISION NO.

DRAWN BY: M.RIESNER

DRAWING DATE: 04/25/2022

SCALE: NO SCALE

SEWER PUMP STATION DETAILS & SPECIFICATIONS

TELEMETRY & ELECTRICAL DETAILS (2)

PROJECT NUMBER: ----

DRAWING TYPE: DETAILS & SPEC.

SHEET: D4

ENGINEER: ---

FLORIDA P.E. LIC NO. ----

SIG: _____

DATE: _____

PLOT PAPER SIZE: ARCH FULL BLEED D (24.00 X 36.00 INCHES)
C:\USERS\MRIESS\ONEDRIVE - CITY OF LAKELAND\AUTODESK\STANDARD DETAIL\DRAWINGS\PUMPSTATION SHEET UPDATE\NEW PUMP STATION DETAILS\PUMPSTATION DETAILS - XREF CORE.DWG
PLOT DATE: 15-Jun-22

ITEM	QTY	CATALOG	MFG	DESCRIPTION	USER1	USER3
1	7	GMA-2A	BUSSMANN	Fuse, 5x20mm, 2A, FAST-ACTING		TBL-0005
2	1	GMA-3A	BUSSMANN	Fuse, 5x20mm, 3A, FAST-ACTING		FUS-0006
3	1	140-5048-502	CALAMP	RADIO, ETHERNET, 400 MHZ LICENSED		
4	1	PAN0007	CURRY	WIRE DUCT; PANDUIT G1.5X3WH6, WHT, SLOTTED, 1.5"W x 3"H		
5	1	PAN0014	CURRY	WIRE DUCT COVER; PANDUIT C1.5WH6, WHT		
6	1	PNL0040	CURRY	DIN RAIL, ZINC CHROMATE, 7.5 MM x 35 MM x 2 M		
7	1	DMS-20PC-4/20S	DATEL	DIGITAL PANEL METER, LED, 3.5" DIGITS		
8	2	350-2107-ND	DIGI-KEY	LED PANEL LIGHT, YELLOW, 24VDC		
9	1	64 MAGNETIC SWITCH	EDWARDS SIGNALING	MAGNETIC INTRUSION SWITCH, SPDT , 30V, 250mA		
10	2	0113 084.01	ENTRELEC	PEB MARKER-HOLDER WITH MARKER AND TRANSPARENT PROTECTION		TBL-0037
11	11	0115 116.07	ENTRELEC	TERMINAL BLOCK - M 4/6	4.4-7.1 lb.in	TBL-0001
12	1	0115 271.22	ENTRELEC	DOUBLE DECK TERMINAL BLOCK - M 4/6.D2	4.4-7.1 lb.in	TBL-0014
13	1	0115 657.25	ENTRELEC	TERMINAL BLOCK - M 4/8.SF		TBL-0013
14	7	0115 663.23	ENTRELEC	24VDC LED INDICATOR FUSE TERMINAL BLOCK - M 4/8.SFD	4.4-7.1 lb.in	TBL-0109
15	2	0116 951.15	ENTRELEC	END SECTION - FEM8S		TBL-0005
16	6	0118 368.16	ENTRELEC	END SECTION - FEM6		TBL-0002
17	2	0118 499.23	ENTRELEC	END SECTION - FEM6D		TBL-0010
18	1	0165 113.16	ENTRELEC	TERMINAL BLOCK FOR GROUND WIRES - M 4/6.P		
19	2	0168 973.07	ENTRELEC	JUMPER BAR BJM6-10, 10 POLE, FOR M4/6 - NON-IP20		TBL-0026
20	4	0173 520.22	ENTRELEC	JUMPER BAR, BJM6D-10, 10 POLE, FOR M4/6.D2 - NON-IP20		TBL-0021
21	1	A24H2412SSLP3 PTW	HOFFMAN	WALL MT, STAINLESS STEEL TYPE 4X ENCLOSURE, WHITE		
22	1	A24P24	HOFFMAN	BACKPLATE, 21 X 21		
23	1	AHCI5E	HOFFMAN	CORROSION INHIBITOR		
24	1	LED24V15	HOFFMAN	ENCLOSURE LIGHT, 15", LED, 470 LUMENS, 24VDC, 0.5A		
25	1	X9737	HOFFMAN	SWING PANEL. SEE APPROVED DRAWING		
26	1	6920K51	McMASTER-CAR R	GROUND LUG, 2 WIRE		
27	1	BMX CPS 2010	MODICON	M340 POWER SUPPLY MODULE - 17W		
28	2	BMX DDI 1602	MODICON	M340 DISCRETE INPUT MODULE		
29	3	BMX FTW 301	MODICON	M340 CORD SET 20 PIN TERMINAL BLOCK ONE END FLYING LEADS		
30	1	BMX FTW 301S	MODICON	M340 CORD SET 20 PIN TERMINAL BLOCK ONE END FLYING LEADS		
31	1	BMX P34 2020	MODICON	M340 PERFORMANCE PROCESSOR MODULE		
32	1	BMX XBP 0600	MODICON	M340 RACK		
33	1	BMX AMI 0410	MODICON	M340 ANALOG INPUT MODULE - INDUSTRIAL MEASUREMENT DEVICE		
34	1	BMX DRA 0805	MODICON	M340 DISCRETE RELAY OUTPUT MODULE		
35	1	RG400	NEMAL ELECTRONICS	COAX RG400 UHF-MALE TO TNC RIGHT ANGLE MALE X 24"		
36	1	2320319	PHOENIX CONTACT	24 VDC 7.2Ah BATTERY		
37						
38	1	2905228	PHOENIX CONTACT	SURGE PROTECTION DEVICE 150VAC		
39	4	2906809	PHOENIX CONTACT	SURGE PROTECTION DEVICE, 24VDC, TTC-6P-1X2-24DC-UT-I		
40	1	2907161	PHOENIX CONTACT	TRIO UPS 2G/ 1AC/ 24DC/ 10		
41	1	2963860	PHOENIX CONTACT	DIN-RAIL MOUNTABLE SINGLE SOCKET 120V/15A		
42	1	IS-50UX-C1	POLYPHASER	COAXIAL SURGE SUPPRESSOR, UHF-FEMALE / UHF-FEMALE		RAD-0004
43	1	RADIO SHELF 2	QUALITY	RADIO SHELF (2X6X8 X.125 THICK)		
44	2	9001-KS43BH13	SQD	SELECTOR SW - 3 POS MAINT, NEMA 4/13		
45	1	9001KR1RH13	SQD	PUSH BUTTON - MOMENTARY, NEMA 4/13		
46	1	KP35R31	SQD	RED PILOT LIGHT - STANDARD, NEMA 4/13		
47	1	PK7GTA	SQD	GROUND STRIP, 7 BARRELS	20 in-lbs	
48	1	QOU115	SQD	CIRCUIT BREAKER - QO FRAME - 15 A		
49	1	9001SKP35G31	SQUARE D	POLIT LIGHT 24VDC, GREEN		
50	9	249-117	WAGO	SCREWLESS END STOP; 10 MM / 0.394 IN WIDE; CARRIER RAIL DIN 35		TBL-0082

Item #	PLC Hardware	Manufacturer	Manufacturer Part No.	Curry Part No.	Panel: RTU
70	M340 06 Slot PLC Backplane	Modicon	BMX XBP 0600 rack		1
71	M340 PLC Power Supply	Modicon	BMX CPS 2010		1
72					
73	M340 PLC Processor	Modicon	BMX P34 2020		1
74					
75	M340 PLC 16 pt 24vdc Digital Input Module	Modicon	BMX DDI 1602		2
76	M340 PLC 8 pt Relay Output Module	Modicon	BMX DRA 0805		1
77	M340 PLC 4 ch 4-20 mA Analog Input Module	Modicon	BMX AMI 0810		1
78					
79	M340 PLC I/O Module 20 pt Flying Leads Connectors	Modicon	BMX FTW301		4
80					
81					
82					
83					

Item #	5.2	Manufacturer	Manufacturer Part No.	Curry Part No.	Panel: RTU
1	Level Transmitter 0-15 Feet (40" cable)	SENEX	ST3-PF-150-A15-B41-40-C01		1
2					
3	********** VERIFY PRESSURE RANGE **********				
4	Fluid Filled Pressure Gage (Range may vary) 0-100 psi	Wika	233.54 2-1/2" SS		2
5					
6	********** VERIFY PRESSURE RANGE **********				1
7	Pressure Assembly:	Reotemp	TF.8252.G7.2530.01.19.34.40.X X.W5N.08-04		
8	WIKA 233.54 Gauge, 2-1/2" SS 0-xx psig liquid filled				
9	mounted w/ SS Tee and a WIKA S-10 4-20mA				
10	pressure transmitter, range 0-100 psig, electrical				
11	option 1632159 (DIN43650 w/ 1/2" NPTF				
12	conduit connection) on a diaphragm				
13	seal 990.10/12 with a 3/4" process connection				
14	NOTE: The pressure gauge is mounted horizontally				
15	face up. The transmitter is mounted vertically				
16					
17	3/4" SS Ball Valve	JOMAR'S	T-SS-2000		3
18	3/4" Male to 3/4" Male SS Nipple, Length 6"	McMaster Carr	4830K198		1
19	3/4" Male to 1/4" Female SS Adapter	McMaster Carr	4452K168		2
20					
21	High Level Float Switch	Flygt	ENM-10-60		1
22					

Item #	Electrical Materials	Manufacturer	Manufacturer Part No.	Curry Part No.	Panel: RTU
1	1-1/2" Alum Conduit				20 Ft
2	1-1/2" Myers Hub				2
3					
4	3/4"Alum Conduit				60 Ft
5	3/4" Myers Hub				9
6	3/4" Alum EYS Sealoff				1
7					
8	3/4" Sch 80 PVC				10 Ft
9	3/4" PVC Male Adapter				1
10					
11	3/4" to 1/2" Reducers Bridgeport 1161				1
12	1/2" Cord Grip			CG-1850	2
13	1/2" Lock Nuts				2
14					
15	1-5/8" SS Strut (4 @ 24" / 2 @ 36")				20 Ft
16	1-1/2" SS Strut Straps				2
17	3/4" SS Strut Straps				7
18	1" SS Strut Straps				6
19	3/8" SS Lock Washers				16
20	3/8" SS All-thread				6 Ft
21	3/8" SS Nuts				16
22	3/8" SS Washers x 1-1/4"				16
23	1-1/4" x 1/4" SS Bolts				4
24	1/4" x 20 SS Nuts				4
25	1/4" x 1" SS Washers				4
26	1/4" SS Lock Washers				4
27	10' x 3/4" Ground Rod				3
28	1/0 Copper Bare Stranded				40 Ft
29	#2 Copper Bare Stranded				20 Ft
30	J-Junior Direct Burial Ground Clamp NSI # G-1-S-BS	Raybro			1
31	3/4" Acorn Ground Rod Clamp NSI # GRC 34H				5
32	3/4" Lock Nuts	Raybro			2
33					

BILL OF MATERIALS

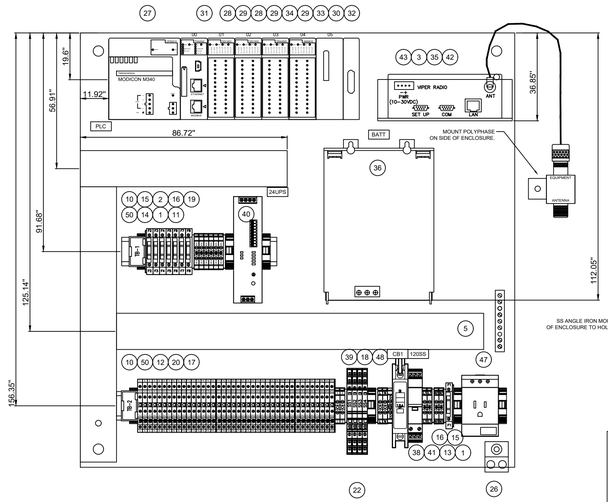

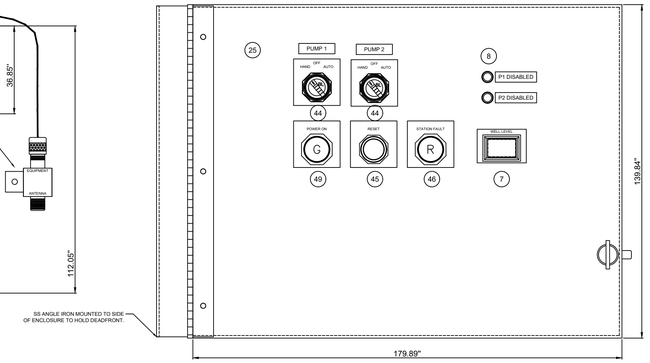

JOB #
ENCLOSURE NAME: RTU PANEL
DRAWING:
ENCLOSURE UL TYPE: 4X
VOLTAGE: 120 VAC
S.C.C.R RATING: 2 KAIC RMS
FUSE NUMBER, TYPE AND SIZE: F1, F4 - F8, GMA, 2 AMP; F2, GMA, 3 AMP; F3, GMA, 4 AMP
FREQUENCY: 60 Hz
FLA: 3 AMP
PHASE: SINGLE
REC. TORQUE/TERMINAL BLOCKS: 4.4-7.1 LB.-IN.

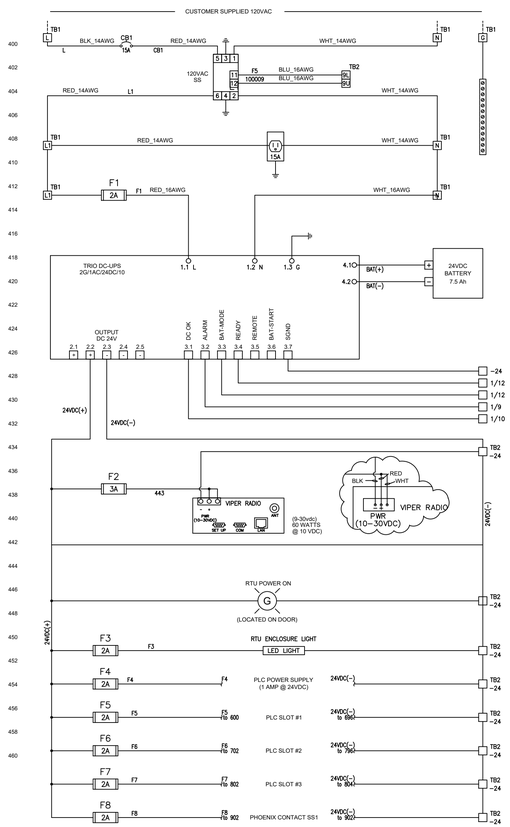

POWER DIAGRAM

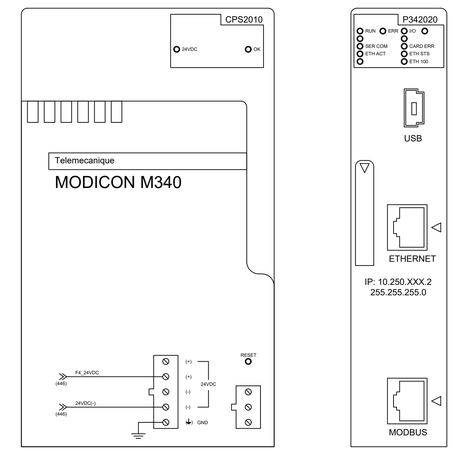

RF IP: 10.0.0.xxx
255.255.255.0
LAN IP: 10.250.xxx.1
255.255.255.0

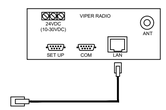

NOTE:

THE MAINTENANCE IP OF THE RADIO IS 1.1.1.1 FOR ALL STATIONS.

RF IN AND LAN IP WILL BE UNIQUE FOR EACH STATION.

PLC POWER SUPPLY & PLC PROCESSOR

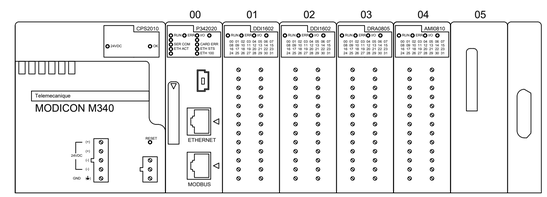

01 — DDI1602

00: PUMP #1 RUNNING	01: PUMP #2 RUNNING	02: SPARE	03: PUMP #1 HOA IN AUTO	04: PUMP #2 HOA IN AUTO	05: SPARE	06: HIGH LEVEL FLOAT	07: SPARE
08: PWR SUPPLY1 UPS READY	09: PWR SUPPLY1 UPS FAULT	10: PWR SUPPLY DC OK	11: PHASE FAIL	12: POWER "FAIL"	13: ALARM RESET	14: SPARE	15: ATS "ON" *
16: NOT USED	17: NOT USED	18: NOT USED	19: NOT USED	20: NOT USED	21: NOT USED	22: NOT USED	23: NOT USED
24: NOT USED	25: NOT USED	26: NOT USED	27: NOT USED	28: NOT USED	29: NOT USED	30: NOT USED	31: NOT USED

02 — DDI1602

00:AUTO MEG #1 (OVERTEMP #1)	01: VFD #1 FAIL	02: VFD #2 FAIL	03: SPARE	04: NO INTRUSION	05: SPARE	06: SPARE	07: TANK RUPTURE *
08:AUTO MEG #2 (OVERTEMP #2)	09: SPARE	10: SEAL FAIL #1	11: SEAL FAIL #2	12: SPARE	13: GEN FAIL *	14: GEN IN AUTO *	15: GEN RUNNING *
16:NOT USED	17: NOT USED	18: NOT USED	19: NOT USED	20: NOT USED	21: NOT USED	22: NOT USED	23: NOT USED
24:NOT USED	25: NOT USED	26: NOT USED	27: NOT USED	28: NOT USED	29: NOT USED	30: NOT USED	31: NOT USED

03 — DRA0805

00: PUMP #1 RUN COMMAND	01: PUMP #2 RUN COMMAND	02: SPARE	03: STATION FAULT	04: SPARE	05: SPARE	06: SPARE	07: SPARE
08: NOT USED	09: NOT USED	10: NOT USED	11: NOT USED	12: NOT USED	13: NOT USED	14: NOT USED	15: NOT USED
16: NOT USED	17: NOT USED	18: NOT USED	19: NOT USED	20: NOT USED	21: NOT USED	22: NOT USED	23: NOT USED
24: NOT USED	25: NOT USED	26: NOT USED	27: NOT USED	28: NOT USED	29: NOT USED	30: NOT USED	31: NOT USED

04 — AMI0810

00: GEN FUEL LEVEL	01: WELL LEVEL	02: SPARE	03: FORCE MAIN PRESSURE	04: NOT USED	05: CURRENT FROM VFD	06: NOT USED	07: NOT USED
08: NOT USED	09: NOT USED	10: NOT USED	11: NOT USED	12: NOT USED	13: NOT USED	14: NOT USED	15: NOT USED
16: NOT USED	17: NOT USED	18: NOT USED	19: NOT USED	20: NOT USED	21: NOT USED	22: NOT USED	23: NOT USED
24: NOT USED	25: NOT USED	26: NOT USED	27: NOT USED	28: NOT USED	29: NOT USED	30: NOT USED	31: NOT USED

PLC LIGHT STATUS / DEFINITIONS

DISCRETE MODULE DIAGNOSTICS

State of module		LEDs RUN (green)	LEDs ERR (red)	LEDs I/O (red)
Normal operation		●	○	○
Internal errors	Module failure	○	●	●
	CPU communication fault	●	⊗	○
External errors	Overload, short circuit, sensor/pre-actuator voltage error	●	○	●
Configuration	Self-test of the module at start-up	⊗	⊗	⊗
	Not configured module	○	⊗	○
Other errors	Module switched off	○	○	○

Key:
● LED on
⊗ LED flashing
○ LED off

ANALOG MODULE DIAGNOSTICS

Module status	Status LEDs RUN	ERR	I/O	IN + or OUT +
Operating normally	●	○	○	●
Module is running with channels in stopped state	●	○	○	○
Module is faulty or switched off	○	○	○	○
Module not configured or channel configuration in progress	⊗	○	○	○
Internal error in module	○	●	○	○
Module not calibrated to factory settings (1)	●	○	●	○
Module is experiencing problems communicating with the CPU (1)	●	⊗	○	●
Module not configured	○	⊗	○	○
External error: ... Range under/overflow error, ... Sensor or actuator link error,	● ●	○ ○	● ●	⊗ ●

Legend:
○ LED off
⊗ LED flashing
⊗ LED flashing rapidly
● LED on

NOTE: THIS CITY OF LAKELAND STANDARD ELECTRICAL/CONTROL SCHEME IS NOT INTENDED FOR REVISION. IF A NEED FOR REVISION IS FOUND, MAKE A REQUEST FOR THE REVISION TO THE CITY'S WATER ENGINEERING PROJECT MANAGER

WATER UTILITIES
ENGINEERING DIVISION
CITY OF Lakeland WATER UTILITIES
501 E. LEMON ST. W-ADMIN/ENG
LAKELAND, FLORIDA 33801-5079
PHONE (863) 834-8316

PLOT PAPER SIZE: ARCH FULL BLEED D (24.00 X 36.00 INCHES)

REVISON DESCRIPTION

REVISON DATE

REVISON NO.

DRAWN BY: M.RIESNER

DRAWING DATE: 04/25/2022

SCALE: NO SCALE

SEWER PUMP STATION DETAILS & SPECIFICATIONS

TELEMETRY & ELECTRICAL DETAILS (3)

PROJECT NUMBER: ----

DRAWING TYPE: DETAILS & SPEC.

SHEET: D5

ENGINEER: ----

FLORIDA P.E. LIC NO. ----

SIG: _____

DATE: _____

C:\USERS\WIRESONDOREVC - CITY OF LAKELAND\AUTODESK\STANDARD DETAIL DRAWINGS\PUMPSTATION SHEET UPDATE\W PUMP STATION DETAILS\PUMP-STATION DETAILS - XREF CORE.DWG

PLOT DATE: 10-Jun-22

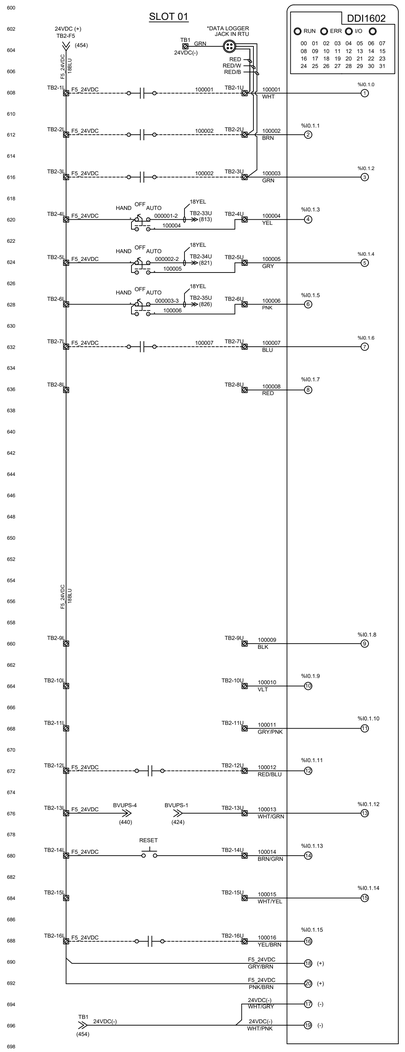

DIGITAL INPUTS SLOT 1

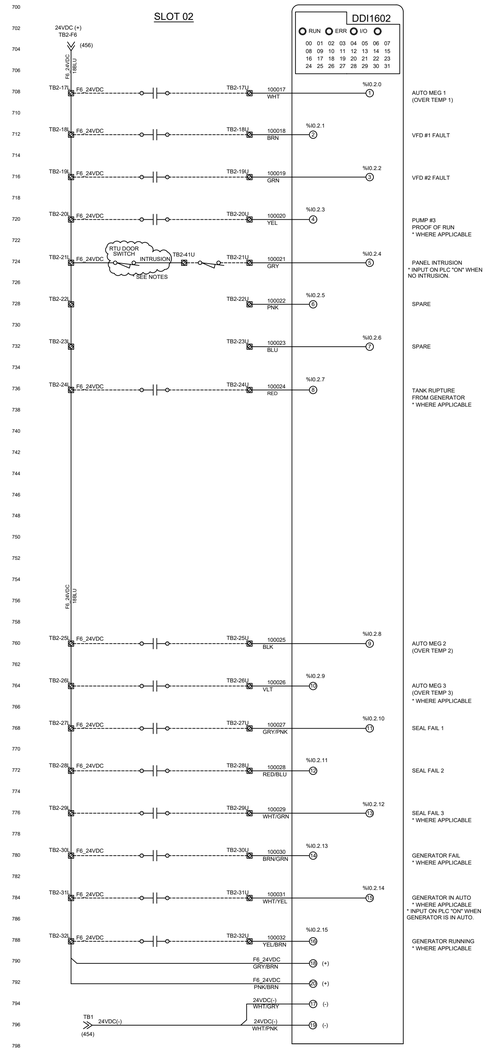

DIGITAL INPUTS SLOT 2

NOTES:

*DOOR SWITCH IS WIRED NORMALLY OPEN AND HELD CLOSED. INPUT SHOULD BE HIGH WHEN THE DOOR IS CLOSED.

*LOCATE SWITCH IN THE UPPER RIGHT HAND CORNER OF THE RTU ENCLOSURE.

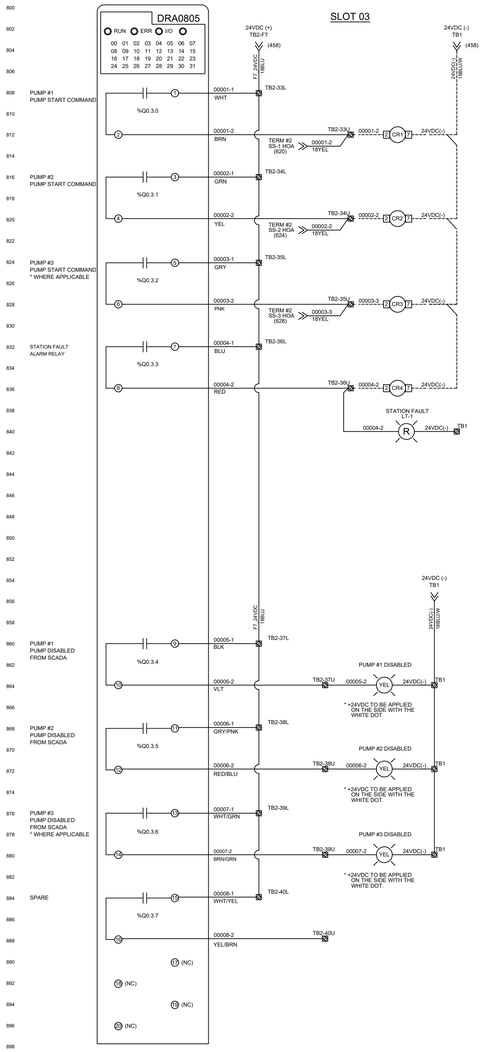

RELAY OUTPUTS SLOT 3

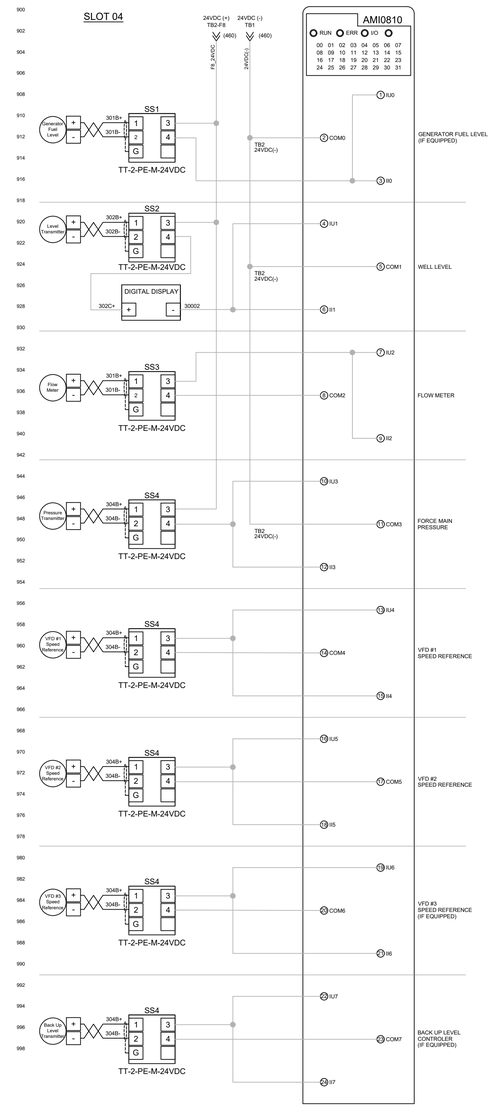

ANALOG INPUTS SLOT 4

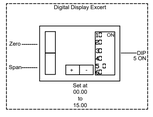

SPARE SLOT 5

NOTE: THIS CITY OF LAKELAND STANDARD ELECTRICAL/CONTROL SCHEME IS NOT INTENDED FOR REVISION. IF A NEED FOR REVISION IS FOUND, MAKE A REQUEST FOR THE REVISION TO THE CITY'S WATER ENGINEERING PROJECT MANAGER

WATER UTILITIES
ENGINEERING DIVISION
501 E. LEMON ST. W-ADMIN/ENG
LAKELAND, FLORIDA 33801-5079
PHONE (863) 834-8316
CITY OF Lakeland WATER UTILITIES

PLOT PAPER SIZE: ARCH FULL BLEED D (24.00 X 36.00 INCHES)

REVISION DESCRIPTION

REVISION DATE

REVISION NO.

DRAWN BY: M.RIESNER

DRAWING DATE: 04/25/2022

SCALE: NO SCALE

SEWER PUMP STATION DETAILS & SPECIFICATIONS

TELEMETRY & ELECTRICAL DETAILS (4)

PROJECT NUMBER: ----

DRAWING TYPE: DETAILS & SPEC.

SHEET: D6

ENGINEER: ----

FLORIDA P.E. LIC NO. ----

SIG: _____

DATE: _____

C:\USERS\MRIES\ONEDRIVE - CITY OF LAKELAND\AUTODESK\STANDARD DETAIL DRAWINGS\PUMPSTATION SHEET UPDATE\NEW PUMP STATION DETAILS\PUMP-STATION DETAILS - VFD07_CORE.DWG

PLOT DATE: 15-Jun-22